

CEILING&FLOOR

Free-Match & Light Commercial

Feature

▶ Long Air Supply Distance

Up to 14m,meet large room requirement.

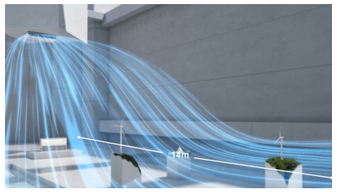

▶ Anti-condensation

Industry-leading anti-condensation insulation design of the air outlet.



▶ Fresh air intake

Fresh air intake hole design can introduce fresh air to ensure high air quality in the room.

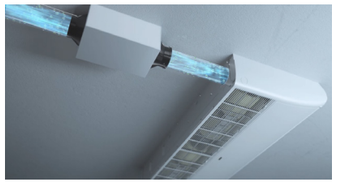

▶ Easy drainage

Left and right water outlet design of water connection plate, flexible for installation site.



▶ Beautiful Design of Display Board

The display board is beautiful built in design, with good sealing, moisture-proof and long reliable life.



▶ Optional filter

A variety of health filters can be selected to improve room air quality.

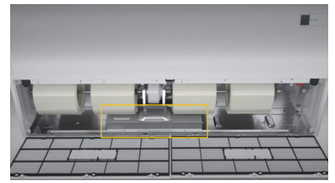

▶ Easy Maintenance

Enough space to maintenance, no need to take out the whole electrical control box.

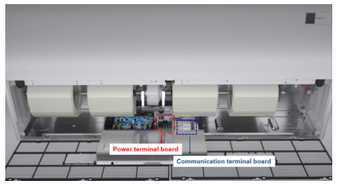

▶ Central control function

Optional dry node function, when the unit senses the window opening or sensing the fire, the unit will automatically shut down.





Specification-Light Commercial

Sale Model		Indoor	AUCF-H18/4DR3HFA	AUCF-H24/4DR3HFA	AUCF-H36/NDR3HFC
		Outdoor	AL-H18/NDR3HB2(U)	AL-H24/NDR3HB2(U)	AL-H36/NDR3C2(U)
IDU Power Supply		V~,Hz,Ph	220-240/50&60/1	220-240/50&60/1	220-240/50/1
Capacity	Cooling	Btu/h	18000(5500-20500)	24000(7400-28000)	36265(9246-39978)
		kW	5.3(1.60-6.00)	7.03(2.16-8.20)	10.55(2.69~11.63)
	Heating	Btu/h	19450(4800-24600)	26000(6800-31700)	38328(5500-40906)
		kW	5.7(1.40-7.20)	7.62(1.98-9.30)	11.15(1.60~11.90)
Electric Data	Rated Cooling Power Input	W	1550(480-2300)	2150(670-3300)	3100(240~3410)
	Rated Heating Power Input	W	1520(470-2400)	2050(650-3300)	3000(310~3160)
Performance	EER/COP	W/W	3.42/3.75	3.27/3.72	3.40/3.72
	SEER/SCOP	W/W	6.1/4.0	6.2/4.0	6.1/4.0
Indoor Unit	Indoor Air Flow (Hi/Mi/Lo)	m3/h	900/720/600	1230/1020/840	2040/1740/1440
		CFM	530/420/350	724/600/494	1250/1080/900
	Sound Pressure Noise Level (Hi/Mi/Lo)	dB(A)	40/35/33	42/38/35	50/46/43
	Sound Power Noise Level	dB(A)	51	52	60
	Net Dimension (W*D*H)	mm	1000×690×235	1280×690×235	1600×690×235
	Packing Dimension (W*D*H)	mm	1080×770×325	1360×770×325	1680×770×325
	Net Weight	Kg	28	34	40
	Gross Weight	Kg	32.5	39.5	45.5
Refrigerant Pipe	Liquid Side	mm	6.35(1/4)	9.52(3/8)	9.52(3/8)
	Gas Side	mm	12.7(1/2)	15.88(5/8)	15.88(5/8)
	Drainage	mm	R3/4in(DN20)	R3/4in(DN20)	R3/4in(DN20)
Wired/Remote Controller			YKR-K/001E	YKR-K/001E	YKR-K/001E
StµFfing Quantity	20/40/40H	Set	112/224/256	84/175/200	44/96/96

Sale Model		Indoor	AUCF-H42/NDR3HFC	AUCF-H48/SDR3HFC	AUCF-H60/SDR3HFC
		Outdoor	AL-H42/NDR3C2(U)	AL-H48/SDR3C2(U)	AL-H60/SDR3C2(U)
IDU Power Supply		V~,Hz,Ph	220-240/50/1	220-240/50&60/1	220-240/50&60/1
Capacity	Cooling	Btu/h	41593(9246-43209)	48000(16241-49474)	55000(16241-59710)
		kW	12.10(2.69~12.57)	14.00(4.76-14.50)	16.00(4.76-17.50)
	Heating	Btu/h	46406(5500-48571)	54600(16309-56298)	58000(16309-63122)
		kW	13.50(1.60~14.13)	16.00(4.78-16.5)	17.00(4.78-18.50)
Electric Data	Rated Cooling Power Input	W	3500(240~3950)	5000(1710-5900)	5800(1710-6850)
	Rated Heating Power Input	W	4200(310~4420)	5100(1710-6050)	4900(1710-7000)
Performance	EER/COP	W/W	3.46/3.21	2.8/3.14	2.76/3.47
	SEER/SCOP	W/W	/	/	/
Indoor Unit	Indoor Air Flow (Hi/Mi/Lo)	m3/h	2040/1740/1440	2040/1740/1440	2160/1820/1480
		CFM	1250/1080/900	1250/1080/900	1320/1120/910
	Sound Pressure Noise Level (Hi/Mi/Lo)	dB(A)	50/46/43	50/46/41	51/47/43
	Sound Power Noise Level	dB(A)	60	62	63
	Net Dimension (W*D*H)	mm	1600×690×235	1600×690×235	1600×690×235
	Packing Dimension (W*D*H)	mm	1680×770×325	1680×770×325	1680×770×325
	Net Weight	Kg	40	40	41
	Gross Weight	Kg	45.5	45.5	46.5
Refrigerant Pipe	Liquid Side	mm	9.52(3/8)	9.52(3/8)	9.52(3/8)
	Gas Side	mm	15.88(5/8)	15.88(5/8)	15.88(5/8)
	Drainage	mm	R3/4in(DN20)	R3/4in(DN20)	R3/4in(DN20)
Wired/Remote Controller			YKR-K/001E	YKR-K/001E	YKR-K/001E
StµFfing Quantity	20/40/40H	Set	44/96/96	24/50/54	24/50/54

1. Parameters above are all measured when the connecting pipe is 5 meters.
2. Parameters above may be modified as product improvement. We keep the right to change the product specifications without prior notice, please take the parameters listed on the nameplate as criterion

Specification-Free Match

Model	Indoor		AUCF-H09/4DR3HFA	AUCF-H12/4DR3HFA	AUCF-H18/4DR3HFA
Capacity	Cooling	Btu/h	9560(5120–12115)	12285(5800–12625)	18000(8530–19107)
		kW	2.80(1.50–3.55)	3.60(1.70–3.70)	5.30(2.50–5.6)
	Heating	Btu/h	10240(5460–13000)	13306(6930–15080)	19790(10340–24000)
		kW	3.00(1.60–3.81)	3.9(2.03–4.42)	5.80(3.03–7.03)
Electric Data	Power Supply	V~,Hz,Ph	220–240V 50Hz	220–240V 50Hz	220–240V 50Hz
	Rated Cooling Power Input	W	70(20–125)	70(20–125)	80(20–125)
	Rated Heating Power Input	W	70(20–125)	70(20–125)	80(20–125)
Performance	Air Flow Volume	m3/h	840/700/580	840/700/580	900/720/600
	Sound Pressure Noise Level	dB(A)	40/34/31	40/34/31	42/35/33
	Sound Power Level	dB(A)	55	55	58
Dimension	Net(W*D*H)	mm	1000×690×235	1000×690×235	1000×690×235
	Packing(W*D*H)	mm	1080×770×325	1080×770×325	1080×770×325
Weight	Net/Gross	kg	27/32.5	27/32.5	28/33.5
Pipe Diameter	Liquid Side	mm(inch)	6.35(1/4)	6.35(1/4)	6.35(1/4)
	Gas Side	mm(inch)	12.7(1/2)	12.7(1/2)	12.7(1/2)
	Drainage	mm	20	20	20
Stuffing Quantity	20/40/40H	Set	112/224/256	112/224/256	112/224/256

1. Parameters above are all measured when the connecting pipe is 5 meters.
2. Parameters above may be modified as product improvement. We keep the right to change the product specifications without prior notice, please take the parameters listed on the nameplate as criterion

Dimension

AUCF-H09/4DR3HFA AUCF-H12/4DR3HFA AUCF-H18/4DR3HFA

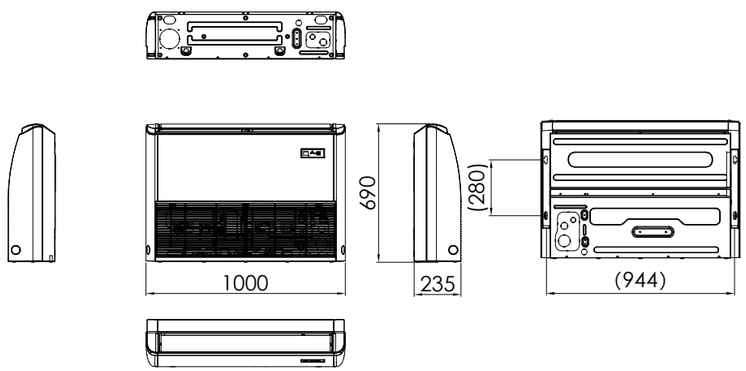

AUCF-H18/4DR3HFA

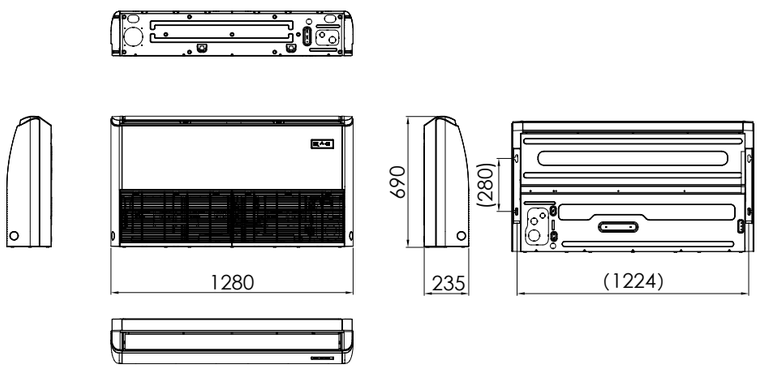

Dimension

AUCF-H24/4DR3HFA AUCF-H36/NDR3HFC AUCF-H42/NDR3HFC AUCF-H48/SDR3HFC AUCF-H60/SDR3HFC

